UNIVERSITY OF CAMBRIDGE INTERNATIONAL EXAMINATIONS
General Certificate of Secondary Education
Advanced Subsidiary Level and Advanced Level

CANDIDATE NAME

CENTRE NUMBER

CANDIDATE NUMBER

8596069373

PHYSICS **9702/31**

Paper 31 Advanced Practical Skills 1 **May/June 2007**

2 hours

Candidates answer on the Question Paper.
Additional Materials: As listed in the Confidential Instructions.

READ THESE INSTRUCTIONS FIRST

Write your Centre number, candidate number and name on all work you hand in.
Write in dark blue or black pen.
You may use a soft pencil for any diagrams, graphs or rough working.
Do not use staples, paper clips, highlighters, glue or correction fluid.
DO **NOT** WRITE ON ANY BARCODES.

Answer **both** questions.
You will be allowed to work with the apparatus for a maximum of one hour for each question.
You are expected to record all your observations as soon as these observations are made, and to plan the presentation of the records so that it is not necessary to make a fair copy of them. The working of the answers is to be handed in.
Additional answer paper and graph paper should be submitted only if it becomes necessary to do so.
You are reminded of the need for good English and clear presentation in your answers.

At the end of the examination, fasten all your work securely together.
All questions in this paper carry equal marks.

For Examiner's Use	
1	
2	
Total	

This document consists of **9** printed pages and **3** blank pages.

© UCLES 2007

UNIVERSITY of CAMBRIDGE International Examinations

[Turn over

BLANK PAGE

For Examiner's Use

You may not need to use all of the materials provided.

1 In this experiment you will measure the potential difference across a resistor R_2 of resistance R_2 as the resistance of the circuit is varied.

(a) (i) Connect the circuit shown in Fig. 1.1 using one of the resistors in the chain.

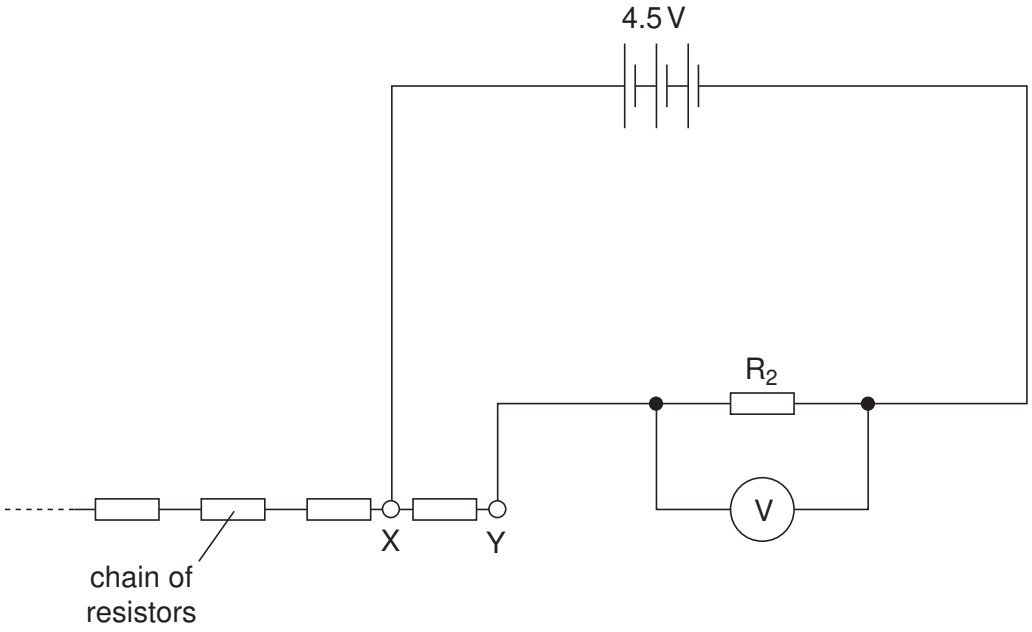

Fig. 1.1

(ii) Record the value of the potential difference V across R_2.

V = ...

© UCLES 2007

[Turn over

(b) Change the number n of resistors between X and Y and repeat **(a)(ii)** until you have six sets of readings for V and n. Include values of $1 / V$ in your table of results.

(c) **(i)** Plot a graph of $1 / V$ (y-axis) against n (x-axis).

(ii) Draw the line of best fit.

(iii) Determine the gradient and the y-intercept of the graph.

gradient = ...

y-intercept = ...

© UCLES 2007

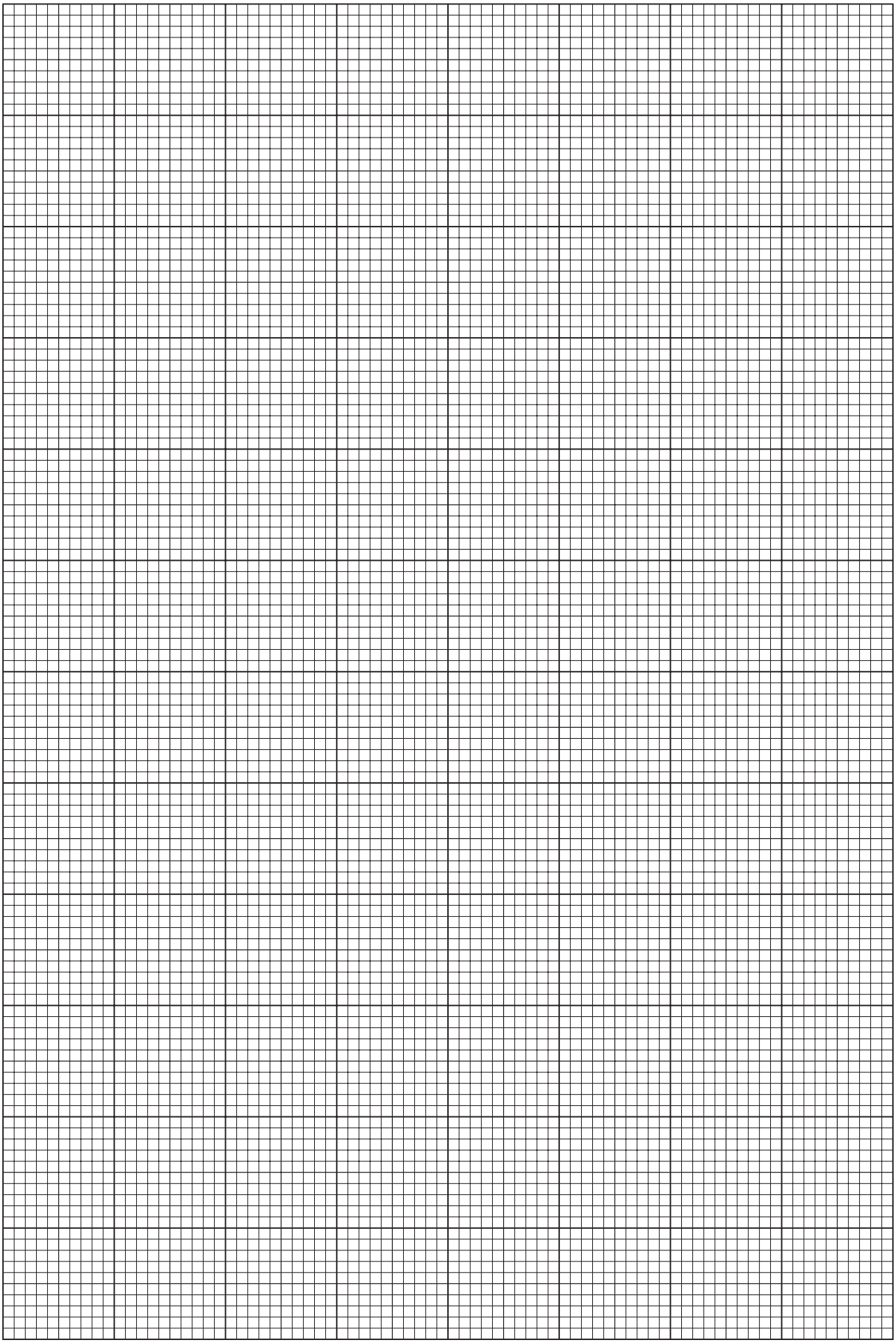

(d) V and n are related by the equation

$$\frac{1}{V} = \frac{nR_1}{ER_2} + \frac{1}{E}$$

where R_1 is the resistance of each of the resistors in the chain and E is the e.m.f. of the battery.

Using your answers from **(c)(iii)**, determine values of E and the ratio $\frac{R_1}{R_2}$.

You should include units where appropriate.

E = ...

$\frac{R_1}{R_2}$ = ...

You may not need to use all of the materials provided.

2 In this experiment you will investigate the height to which a ball rises when it has been released from a stretched piece of rubber.

(a) (i) Suspend the piece of rubber from a clamp and stand using the two small blocks of wood. Attach the ball to the lower end of the rubber. The arrangement should be as shown in Fig. 2.1.

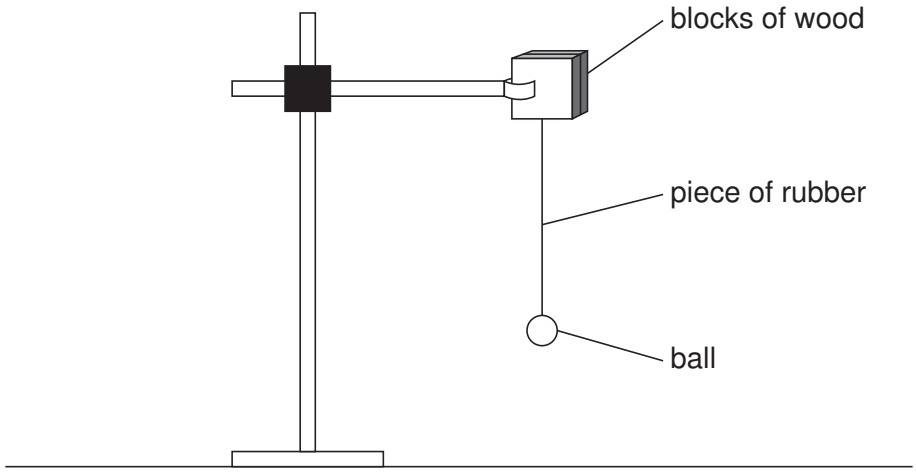

Fig. 2.1

(ii) Clamp the rule vertically. Position the rule near to the suspended ball.

(iii) Record the position of the centre of mass of the ball when it is in equilibrium.

position of centre of mass of the ball = ...

For Examiner's Use

(b) (i) Pull the ball vertically downwards. Record the new position of the centre of mass of the ball and determine its vertical displacement x.

new position of centre of mass of the ball = ...

x = ...

(ii) Release the ball and note the position of its centre of mass when the ball reaches maximum height.

position of centre of mass at maximum height = ...

(iii) Calculate the maximum height h of the ball above the equilibrium position.

h = ...

(c) Estimate the percentage uncertainty in h, showing your working.

percentage uncertainty in h = ...

© UCLES 2007

For Examiner's Use

(d) Change the value of x and repeat **(b)**. Record the new values of x and h.

position of centre of mass when displaced = ...

position of centre of mass at maximum height = ...

x = ...

h = ...

(e) It is suggested that h is directly proportional to x^2. Do the results of your experiment support this idea? You should explain your reasoning clearly.

.....

.....

.....

.....

© UCLES 2007

(f) **(i)** State four sources of error or limitations of the procedure in this experiment.

1. .....

.....

2. .....

.....

3. .....

.....

4. .....

.....

(ii) Suggest four improvements that could be made to this experiment. You may suggest the use of other apparatus or different procedures.

1. .....

.....

2. .....

.....

3. .....

.....

4. .....

.....

© UCLES 2007

BLANK PAGE

BLANK PAGE

Permission to reproduce items where third-party owned material protected by copyright is included has been sought and cleared where possible. Every reasonable effort has been made by the publisher (UCLES) to trace copyright holders, but if any items requiring clearance have unwittingly been included, the publisher will be pleased to make amends at the earliest possible opportunity.

University of Cambridge International Examinations is part of the Cambridge Assessment Group. Cambridge Assessment is the brand name of University of Cambridge Local Examinations Syndicate (UCLES), which is itself a department of the University of Cambridge.